เครื่องปรับอากาศ ทาซากิ

WADM SERIES

AIR FLOW RANGE : 2,500 - 18,000 CFM

COOLING CAPACITY RANGE : 75,000 - 700,000 BTU/HR

AIR HANDLING UNIT

CHILLED WATER SYSTEM

DUCTED TYPE APPLICATION

THAILAND TRUSTED QUALITY

CE SASO

ISO 9001 : 2008 ISO 14001 : 2004

OHSAS 18001 : 2007 ISO/IEC 17025 : 2005

WADM Series

CHILLED WATER AIR HANDING UNIT SPECIFICATION / เครื่องส่งลมเย็นชนิดต่อท่อลมแบบตั้งหรือแขวน

Models				WADM-75	WADM-100	WADM-125	WADM-150	WADM-185	WADM-200	WADM-250	WADM-300	WADM-350	WADM-400	WADM-450	WADM-500	WADM-600	WADM-700
Nominal Capacities		Cooling	Btu/h	75,000	100,000	125,000	150,000	185,000	200,000	250,000	300,000	350,000	400,000	450,000	500,000	600,000	700,000
			kW	21.98	29.31	36.64	43.96	54.22	58.62	73.27	87.92	102.58	117.23	131.89	146.54	175.85	205.16
			kcal/h	18,900	25,200	31,500	37,800	46,620	50,400	63,000	75,600	88,200	100,800	113,400	126,000	151,200	176,400
Power Supply			V/Ph/Hz	220-240/1/50		380-420/3/50											
Power Consumption			kW	1.30	1.66	1.47	2.75	3.66			4.75	6.45		8.63		12.48	
Running Current			A	5.92	8.00	2.89	5.16	6.78			8.80	11.80		15.60		22.30	
Fan	Fan Type			Centrifugal / Direct Drive		Centrifugal / Belt Drive											
	Air Flow		CFM	2500	2800	4100	5000	6,000	6,400	8,000	9,000	10,400	13,000		14,000	17,300	18,000
	ESP		Pa	100		150				200					250	300	
	Blower Material			Zinc coated steel													
	Motor Type			Permanent Split Capacitor		Induction											
	Output Power		W	750	400x2	1,100	2,200	3,000			4,000	5,500		7,500		11,000	
	Running Current		A	5.92	4.00x2	2.89	5.16	6.78			8.80	11.80		15.60		22.30	
Coil	Tube	Material		Copper													
		Material		Aluminum													
	Fin	Row		4		3	4			4			3	4			5
	Face Area		ft^2	4.86	5.91	10.13		12.65		17.40		20.85	26.46			34.60	
Casing	Material			Electro Galvanized Steel													
	Finishing			Epoxy Polyester Powder Paint													
	Insulation			PE													
Dimension	Height		mm			870	870	832	832	1229	1229			1485	1485		1894
	Width		mm			1500	1500	1844	1844	1812	1812			2072	2072		2224
	Depth		mm			979	979	975	975	1187	1187			1480	1480		1480
Weight (included packing)			kg	127	153	220	222	235		368	378	503	556	570	850	920	946
Air Filter				Washable Aluminium (Optional)													
Piping	Pipe Size	Inlet/Outlet	inch	1-1/4		1-1/2		2				2-1/2			3		
		Drain	inch	1													
	Connection Type			Steel													

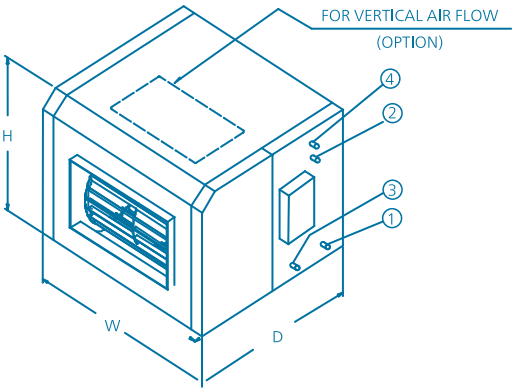

1. INLET PIPE CONNECTION
2. OUTLET PIPE CONNECTION
3. DRAIN PIPE CONNECTION
4. AIR VENT

SPECIFICATIONS AND INFORMATION IN THIS BROCHURE ARE SUBJECT TO CHANGE WITHOUT NOTICE
รายละเอียดดังกล่าวอาจมีการเปลี่ยนแปลงโดยไม่ต้องแจ้งให้ทราบล่วงหน้า

Tasaki

THAI TASAKI ENGINEERING CO., LTD.
89/55 Moo20, Teparak Rd., Bangpleeyai,
Bangplee, Samuthprakarn 10540
Tel. +66-2-752-5030 Fax. +66-2-752-4220
E-mail : info@tasaki.co.th Website : www.tasaki.co.th

CAT.NO.TS-WADM-17S-01